A. Steering gear 760.100 (L 1 Z)

Special tools

Assembly device for steering case	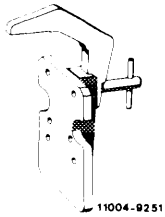 11004-9251	123 589 03 59 00
Insertion sleeve for sealing ring	 11004-7246	180 589 00 61 00
Insertion sleeve for sealing ring	 11004-7237	120 589 05 61 00
Socket element 1/2" square (notched tooth)	 11004-9242	123 589 00 08 00
Torque screwdriver 1/4" square 0.15–0.65 Nm	 11004-7235	001 589 09 21 00
Torque wrench 1/2" square 0–400 Nm	 11004-7994	123 589 02 21 00
Torque wrench handle 20–100 Nm	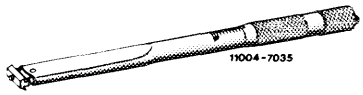 11004-7035	001 589 35 21 00
Torque wrench handle 50–200 Nm		001 589 44 21 00
Pin wrench for threaded ring	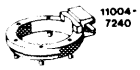 11004-7240	115 589 11 07 00
Socket wrench 60 mm for threaded ring	 11004-9774	123 589 11 09 00
Box-end wrench 46 mm for adjusting ring	 11004-7252	123 589 00 03 00
Socket wrench 41 mm for adjusting ring	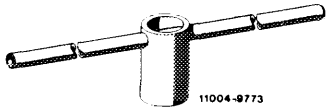 11004-9773	123 589 10 09 00
Internal puller for outer bearing race	 11004-7247	000 589 28 33 00

Countersupport for internal puller	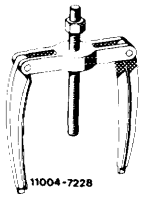	000 589 34 33 00
Adjusting tool for friction torque	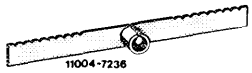	116 589 03 21 00

Conventional tools

Pliers for internal lock J 1	.e.g. made by Hazet, 5630 Remscheid Order No. 1846 a-1
Pliers for internal lock J 3	e.g. made by Hazet, 5630 Remscheid Order No. 1846 a-3
Box-end wrench element 17 mm for torque wrench handle	e.g. made by Hahn u. Kolb, D–7000 Stuttgart Order No. 52251 170

Self-made tools

Assembly bolt for outer race	refer to Fig. item 21, Note
Assembly sleeve for sealing ring	refer to Fig. item 39, Note

Data

Steering 760.100 (L 1 Z)			1st version	2nd version
Number of balls in ball races			64	
Bearing of steering worm	Angular ball bearing with		Plastic cage	Sheet metal cage
Steering housing, housing dia. for outer race			50.995 50.976	
Steering worm, shaft dia. for inner race			19.615 19.602	
Pitman shaft dia. at bearing points		top	30.021	30.021 30.008
		bottom	30.008	32.025 32.009
Pitman shaft bearing			Needle bearing	
Steering housing, basic bore dia.			36.992 36.967	38.983 38.958

Tightening torques	Nm
Threaded ring	180–200
Hex. screws for fastening housing cover	25
SEAL-LOCK collar nut on adjusting screw	40–45

Adjusting values	Ncm
Friction torque with new ball circuit	15–20
Friction torque with used ball circuit min.	3
Friction torque ball circuit with sealing ring	23–28
Friction torque steering worm with angular contact ball bearing	60–70
Total friction torque (pressure device set, measured at steering worm)	100–120

Disassembly

1 Fasten steering to assembly device.

2 Unscrew hex. nut (14) from adjusting screw (13).

3 Unscrew hex. screws for fastening housing cover (12) to steering case (8).

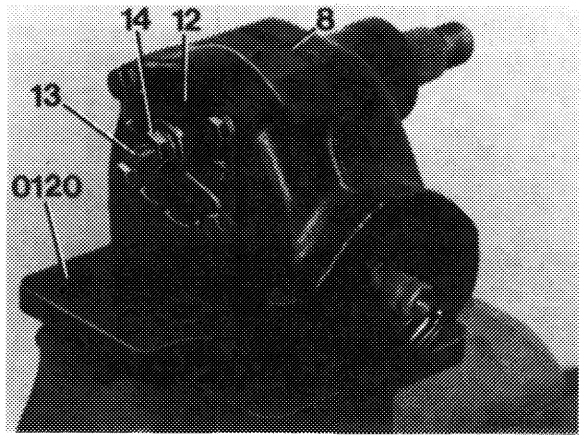

4 Screw adjusting screw (13) into housing cover (12) and remove cover including paper gasket (29).

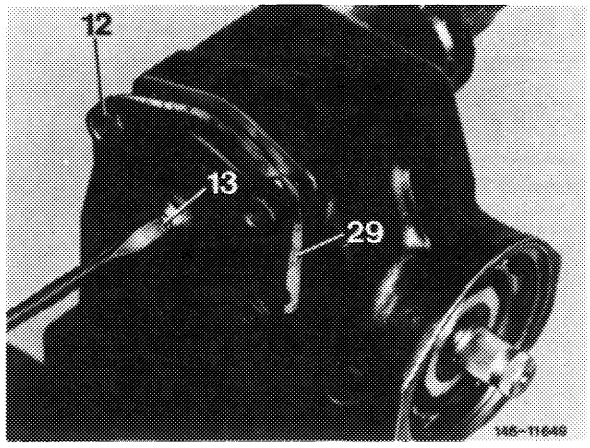

5 Remove pitman shaft (7) from steering case.

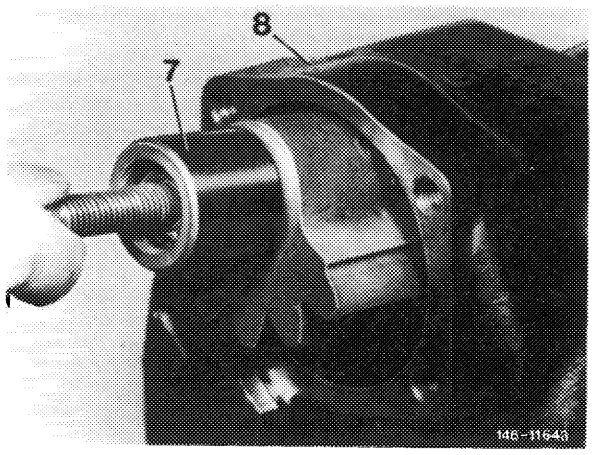

6 Remove locking ring (1) from steering case.

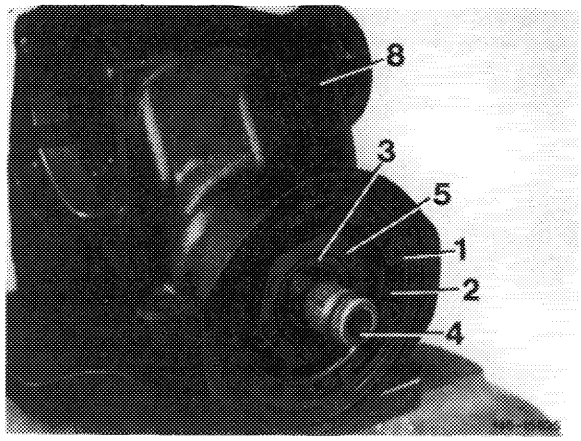

7 Unscrew threaded ring from steering case by means of pin wrench or socket wrench.

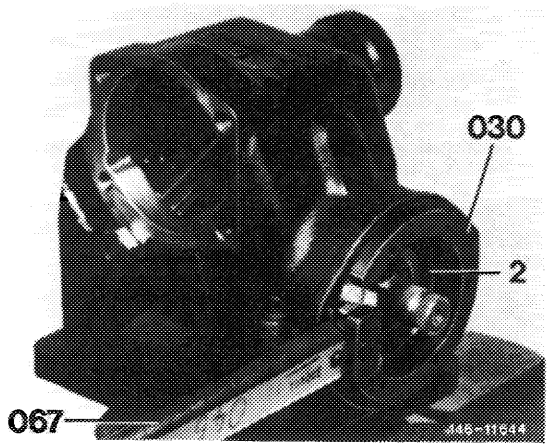

8 Unscrew adjusting ring from steering case.

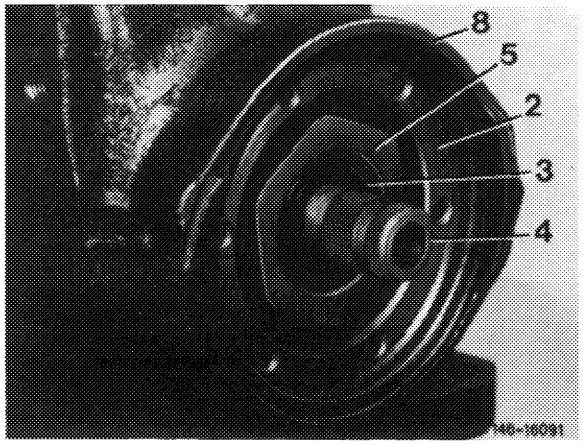

Layout of adjusting ring and threaded ring

Steering 1st version

Threaded steel ring, adjusting ring 46 mm

Layout of adjusting ring and threaded ring

Steering 2nd version

Threaded sheet metal ring 60 mm, adjusting ring 41 mm

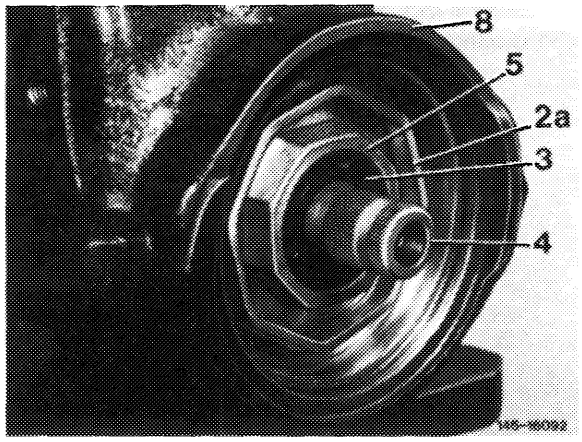

9 Remove steering worm including steering nut and ball cages from steering case.

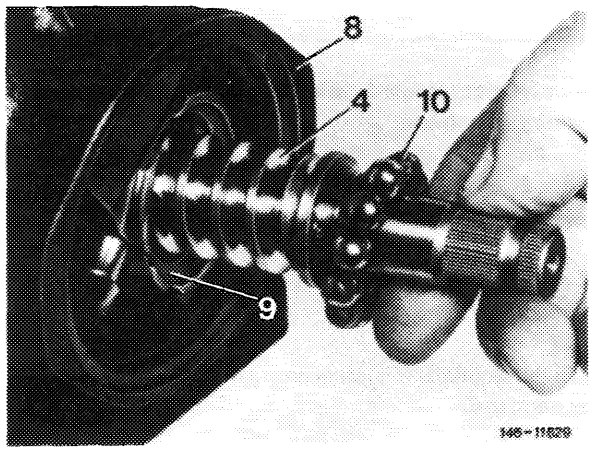

10 Pull outer race of angular ball bearing out of housing by means of internal puller.

Note: If no internal puller is available, the outer race can also be forced out by means of a large offset screwdriver.

11 Remove outer race from adjusting ring.

12 Knock shaft sealing ring out of steering case and adjusting ring.

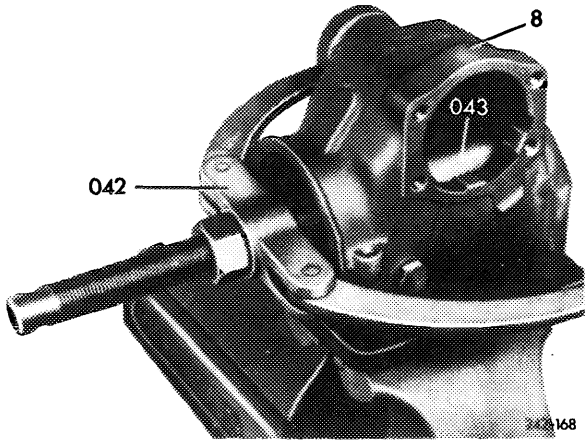

13 Pull inner races of angular ball bearing from steering worm by means of a puller.

Note: If the angular ball bearings are used again, put bearings together in sets or mark.

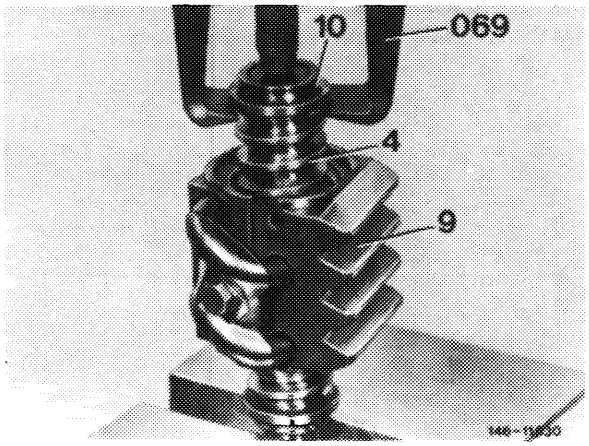

14 Remove locking ring (16) and adjusting screw (13) with spacing washer (17) from pitman shaft.

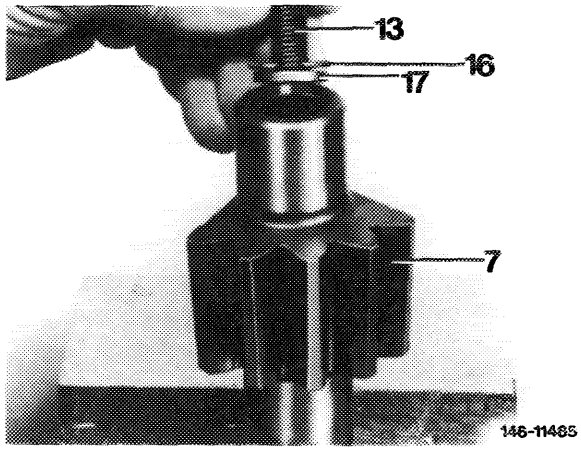

Checkup

Apply strict standards when evaluating steering components for re-use.

15 Steering nut and steering worm

Check ball circuits for score marks, dents or other damage.

Ball guide tubes (11) on steering nut (9) should not be damaged.

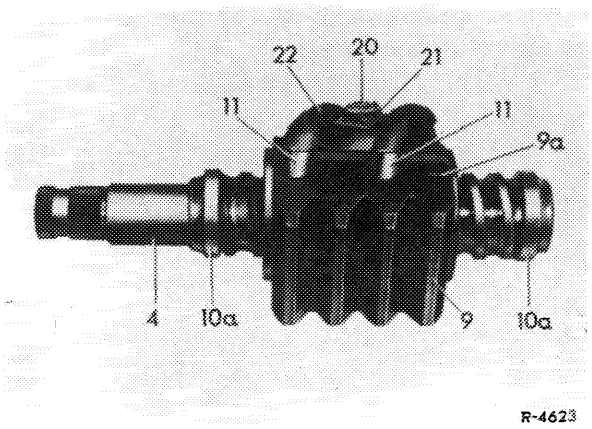

In the event of damage, replace steering nut and steering worm with balls together.

Clamp steering nut (9) by means of aluminum jaws into vise and measure friction torque of circulating balls. Friction torque should be as follows:

New ball circuit 15–20 Ncm = 200 g weight in notch 7 to 10.

Used ball circuit 3 Ncm = 50 g weight in notch 6.

If the measured friction torque is less than 3 Ncm, renew complete ball circuit (steering worm and steering nut).

During production, parts are selected in such a manner that the specified friction torque is available.

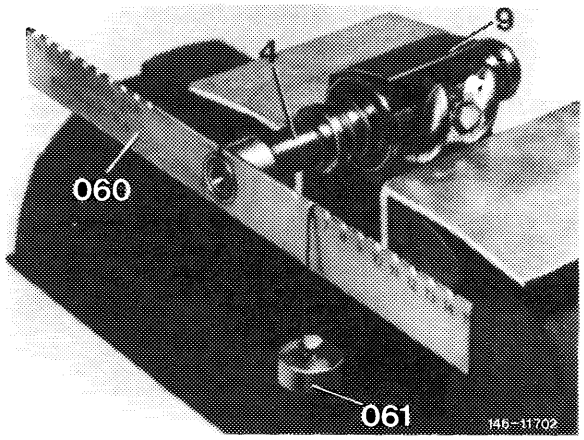

Press a new sealing ring (3) into adjusting ring (5) by means of assembly bolt (068). Fill sealing ring between the two sealing lips with grease.

Note: The assembly bolt is self-made according to specified dimensions.

Slip insertion sleeve on splining of steering worm, then slip adjusting ring on steering worm. Remove insertion sleeve.

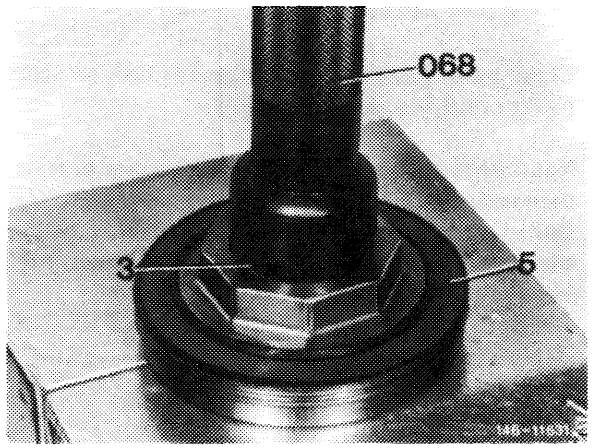

Check friction torque of ball circuit with sealing ring installed, while holding adjusting ring in position. With sealing ring mounted, the friction torque may be higher by 8 to 10 Ncm.

New ball circuit 200 g weight in notch 11 to 14.

Used ball circuit 200 g weight in notch 5 to 6.

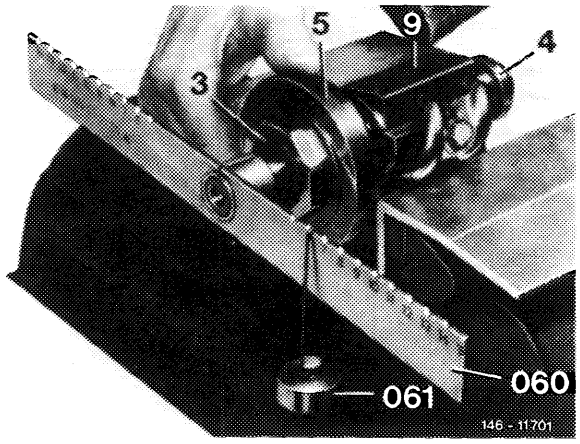

16 **Pitman shaft**

Check for wear on bearing points, also check for distortion or other damage.

17 **Steering case**

Check housing for damage and needle sleeve for wear and renew, if required. For this purpose, knock needle sleeve out of steering case by means of assembly bolt.

Press new needle sleeve into housing by means of assembly bolt.

Note: The assembly bolt is self-made according to specified dimensions.

18 **Steering case cover**

Check steering case cover for flatness. In the event of wear or dents on upper needle bearing, renew complete housing cover.

19 **Angular ball bearing**

Check bearing races as well as cage and balls for score marks or other damage.

Note: Angular ball bearings with plastic cage have been replaced by bearings with sheet metal cage. During reconditioning, make sure that bearings with sheet metal cage may be installed only together with steering nut 2nd version.

Angular ball bearings with plastic cage may be installed in both versions of steering nut.

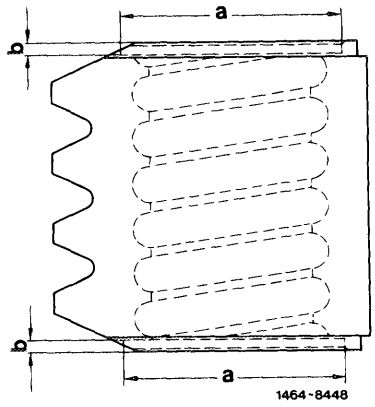

Dimension	1st version	2nd version
"a"	44.5 + 0.2	45.4 + 0.2
"b"	2.5	2.8 + 0.2

Assembly

20 Press in outer race of lower angular ball bearing (10) by means of an assembly bolt.

1 Locking ring
2 Threaded ring
3 Sealing ring
4 Steering worm
5 Adjusting ring
6 Angular ball bearing
7 Pitman shaft
8 Steering case
9 Steering nut
10 Angular ball bearing
11 Fastening clamp for ball guide tube
12 Housing cover

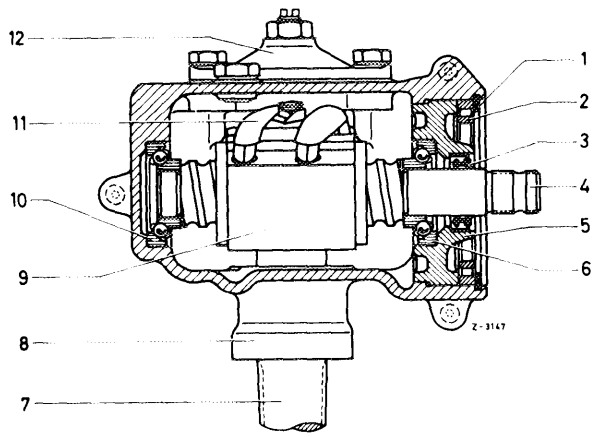

21 Fasten steering case to assembly device.

Note: The assembly bolt is self-made according to specified dimensions.

Teil 4

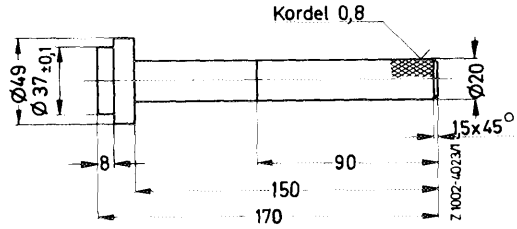

22 Press outer race of upper angular ball bearing (6) into adjusting ring by means of pressing-in device.

23 Heat inner races of angular ball bearing to approx. 80 °C and press on steering worm.

24 Place ball cage into lower outer race.

Note: Pay attention to modified ball cages and steering nut (46–330).

25 Insert steering worm including steering nut into steering case.

26 Place upper ball cage (10) on steering worm.

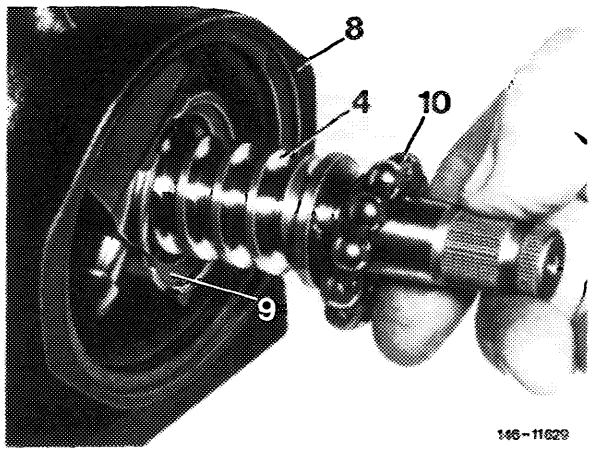

27 Slip insertion sleeve (066) on steering worm and screw adjusting ring (5) for several turns into steering case, then remove insertion sleeve and tighten adjusting ring until steering worm can still be easily rotated.

28 Coat threads in steering case with sealing compound, then screw threaded ring into steering case.

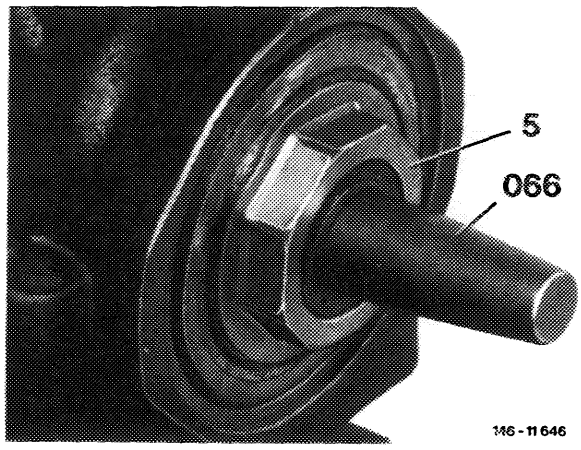

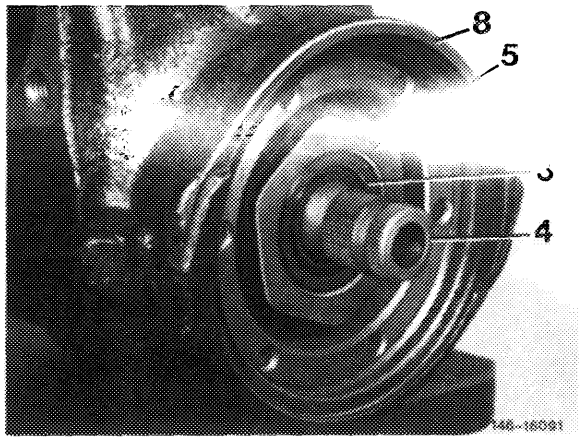

Layout threaded ring and adjusting ring
1st version

Steel threaded ring
Adjusting ring 46 mm

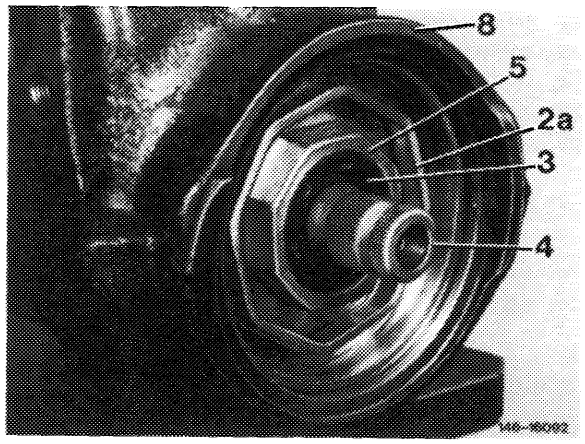

Layout threaded ring and adjusting ring
2nd version

Sheet metal threaded ring 60 mm
Adjusting ring 41 mm

29 Slip socket wrench element (notched tooth) (064) on steering worm and measure friction torque required for turning steering worm by means of torque screwdriver. Friction torque should amount to 60–70 Ncm and is adjusted by means of threaded ring.

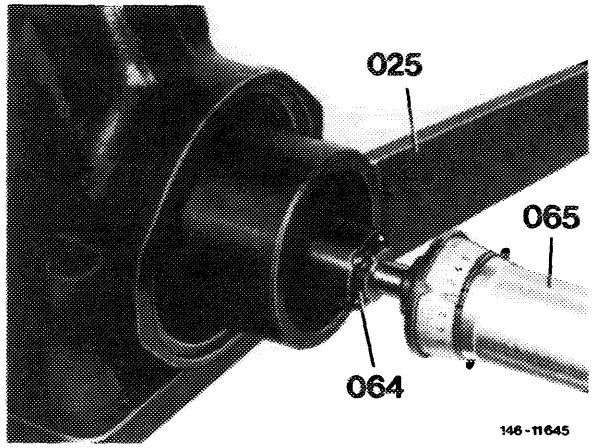

30 On 1st version, tighten threaded ring with pin wrench (030) to 180 to 200 Nm while holding adjusting ring in position, so that adjustment is not changed. Then measure friction torque required for turning steering worm once again.

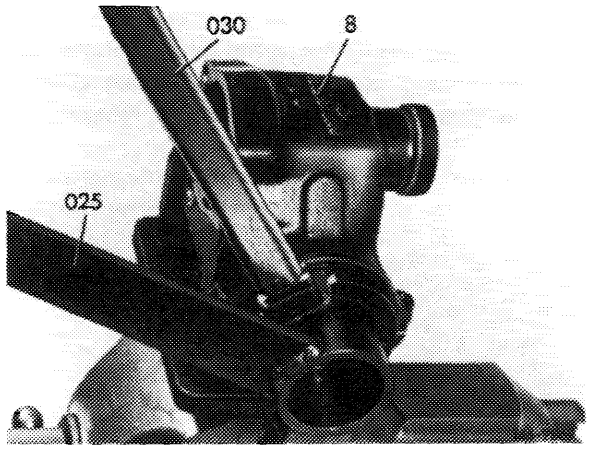

31 On 2nd version, tighten threaded ring with socket wrench (0102) to specified torque while applying counterhold to adjusting ring by means of socket wrench (0101). Secure the two wrenches with clip (0102a). After tightening threaded ring, check friction torque of steering worm once again.

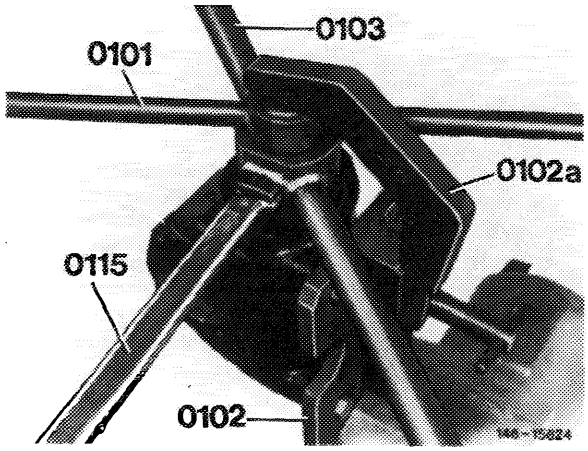

32 Insert locking ring (1) into housing.

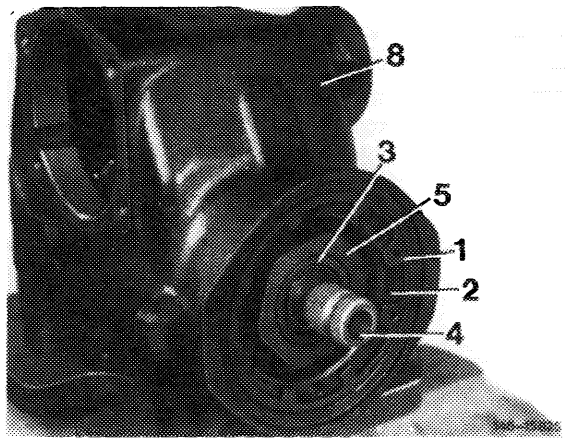

33 Insert adjusting screw (13), spacing washer (17) and locking ring (16) into pitman shaft (7).

Note: Adjusting screw must be installed free of play. For this purpose, spacing washers 3.0; 3.2 and 3.3 mm thick are available.

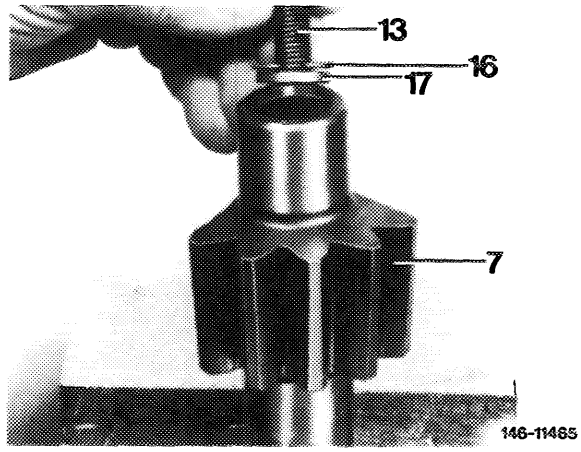

34 Insert pitman shaft (7) into case in such a manner that the center tooth enters the center tooth gap of steering nut.

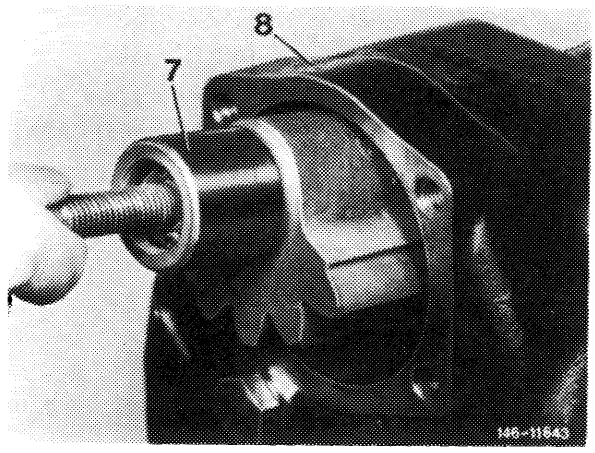

35 Place gasket (29) and casing cap (12) on steering case, while simultaneously screwing adjusting screw (13) into casing cap. Tighten hex. screws to 25 Nm.

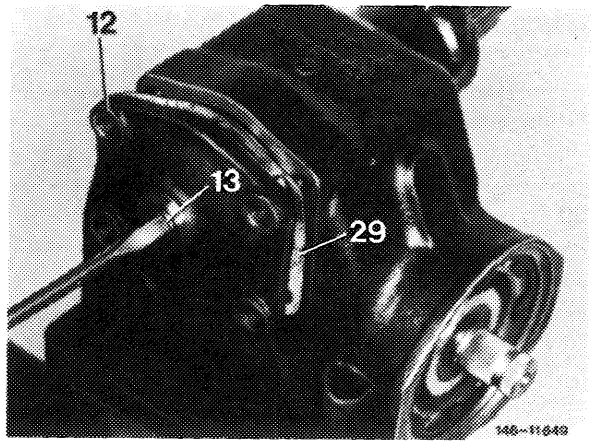

36 Slip socket wrench element (notched tooth) (0105) on steering worm and turn steering from lock to lock by means of torque wrench (0112). The friction torque is adjusted at adjusting screw (13) and should amount to 100 – 120 Ncm when turned beyond center position.

Attention!
When turning steering worm beyond center position, steering should not bind, but a slight pressure point should be noticeable.

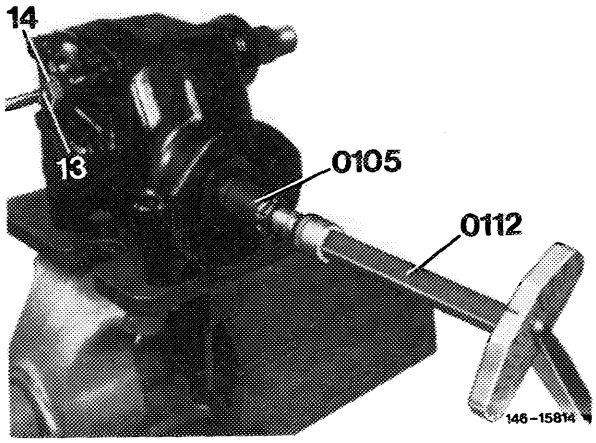

37 Screw SEAL-LOCK collar nut on adjusting screw and tighten to 40 – 45 Nm by means of torque wrench, while applying counterhold to adjusting screw. Then check total friction torque of steering once again.

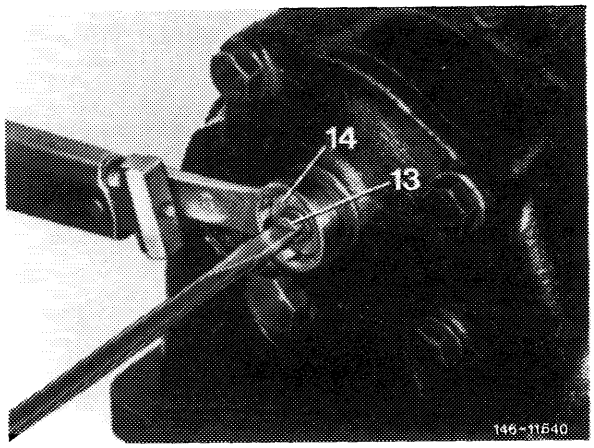

38 Slip insertion sleeve (63) over splining of pitman shaft (7).

39 Fill shaft sealing ring (18) between the two sealing lips with grease and press into steering case by means of assembly sleeve.

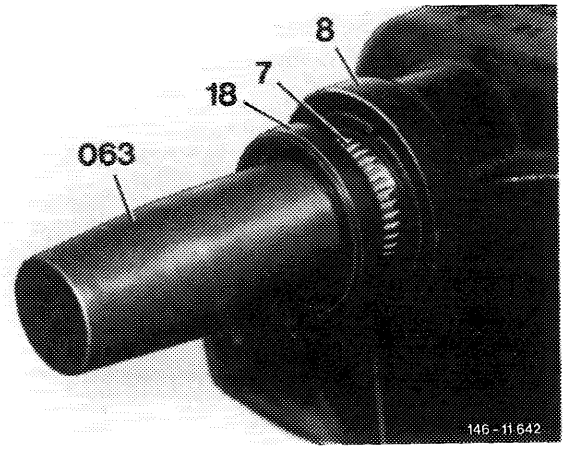

Note: The assembly sleeve is self-made according to specified dimensions.

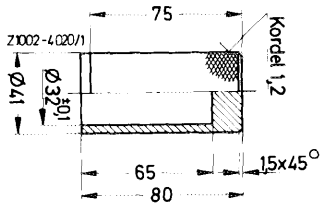

Pitman shaft dia.	Dimension "a"	Dimension "b"
30	32 ± 0.1	41
32	34 ± 0.1	43