Coolant pump, coolant thermostat, inlet connection

Engines 116.960 and 116.961 standard version, 117.960, 117.961

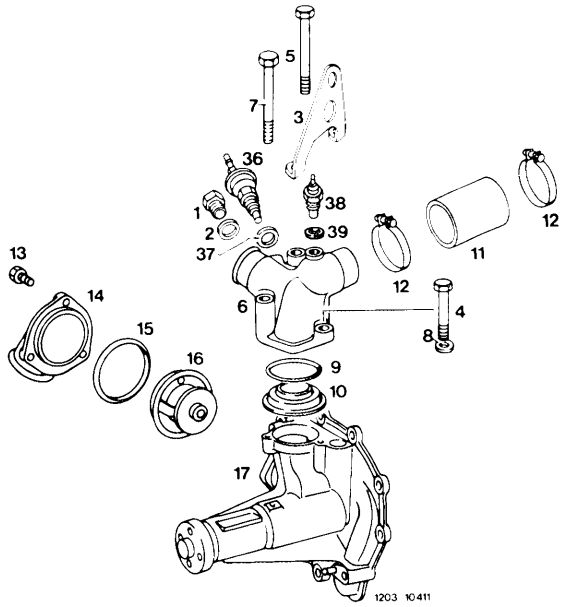

1	Closing plug	M 14 x 1.5, vehicles without air conditioner or automatic climate control
2	Sealing ring	A 14 x 18 – Cu
3	Suspension eye	
4	Hex. head bolt	M 8 x 30, 25 Nm
5	Hex. head bolt	M 8 x 65, 25 Nm
6	Inlet connection	
7	Hex. head bolt	M 8 x 85, 25 Nm
8	Washer	A 8, 4, 1 each
9	Sealing ring	Check, renew if required
10	Spacer ring	
11	Coolant hose	42 x 51 x 40
12	Hose clamp	L 45–35, 2 each
13	Combination screw	M 6 x 20, 3 each, 10 Nm
14	Cover coolant thermostat	
15	Sealing ring	Check, renew if required
16	Coolant thermostat	Start of control $75\,^{+1}_{-3}$ °C, end of control (fully opened) max. 92 °C. Ensure correct installation position
17	Coolant pump	
36	Temperature switch	On: $110\,^{+2}_{-3}$ °C, Off: 105 ± 3 °C. Switches second stage supplementary heater on vehicles with air conditioner or automatic climate control
37	Sealing ring	A 14 x 18 – Cu
38	Temperature transmitter	For coolant temperature indication in instrument cluster. Installed in right-hand cylinder head up to the end of November 1980.
39	Sealing ring	A 14 x 18 Cu

Fan, viscofan clutch, coolant pump

Engines 116.960 and 116.961 standard version, 117.960, 117.961

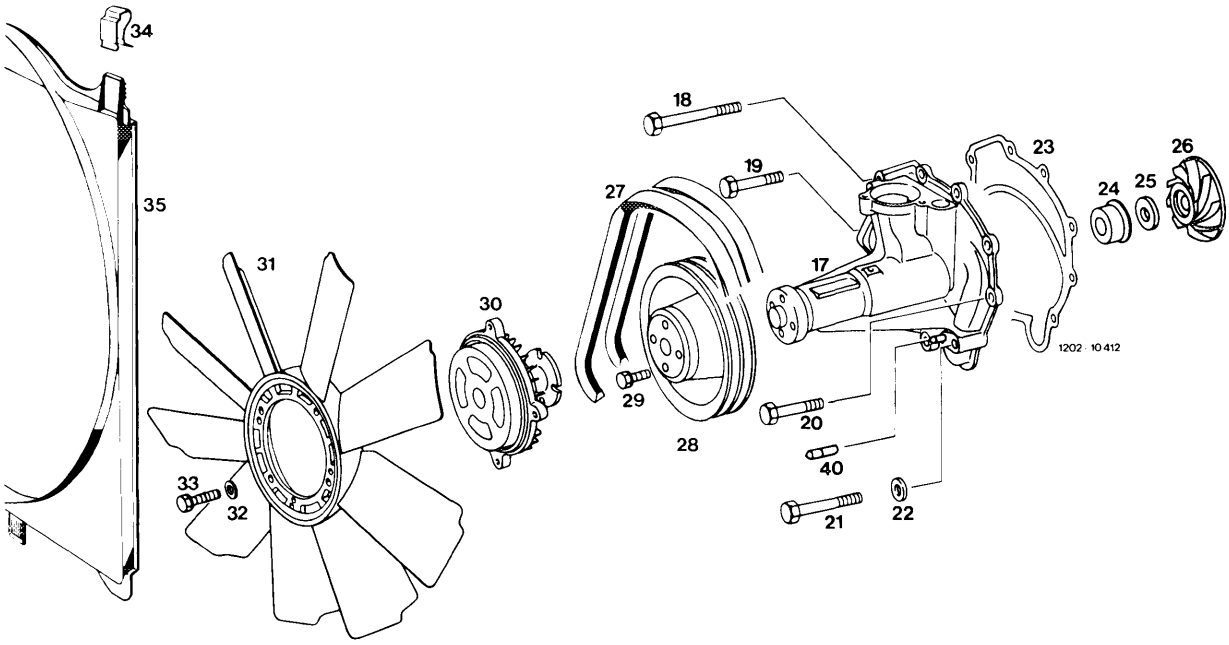

17	Coolant pump	
18	Hex. head bolt	M 8 x 135, 25 Nm
19	Hex. head bolt	M 8 x 65, 2 each, 25 Nm
20	Hex. head bolt	M 8 x 60, 4 each, 25 Nm
21	Hex. head bolt	M 8 x 85, 25 Nm
22	Washer	A 8, 4, 7 each
23	Gasket	Renew
24	Slide ring seal	Observe installation instructions
25	Counterring with sealing ring	Observe installation instructions
26	Impeller	Carefully clean seat for counter-ring
27	V-belt	2 each (dimensions, adjusting values, installation instructions 13–335, 13–340)
28	V-belt pulley	
29	Collar screw	M 8 x 18, 4 each, 25 Nm
30	Viscofan clutch	Speed-controlled
31	Fan	9 blades, 460 mm dia., light alloy
32	Spring washer	B 6, 4 each, standard up to March 1981 together with hex. head bolt M 6 x 22
33	Combination screw	M 6 x 20, 4 each, 11 Nm
34	Flat shaped spring	2 each
35	Fan shroud	
40	Adjusting pointer	

Coolant pump, coolant thermostat, inlet connection

Engines 116.960 and 116.961 national versions (AUS) (J) (S) (USA) 1981
116.962, 116.963, 117.962, 117.963

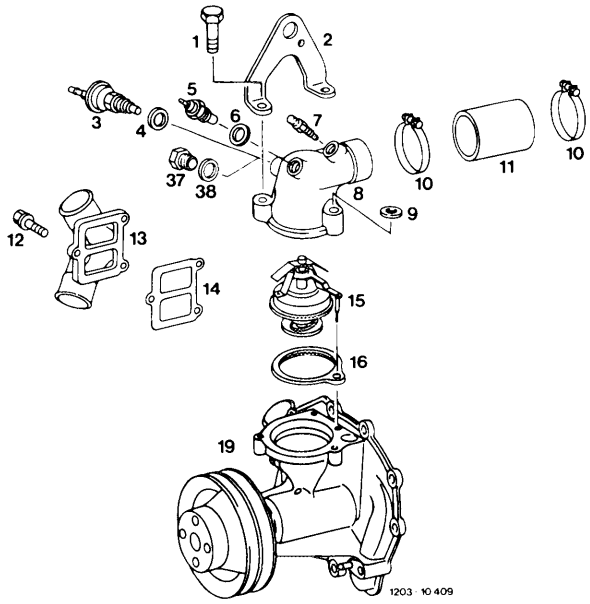

1	Hex. head bolt	M 8 x 35, 3 each, 25 Nm
2	Suspension eye	
3	Temperature switch	On: 110 $^{+2}_{-3}$ °C, Off: 105 ± 3 °C, switches second stage supplementary fan on vehicles with air conditioner or automatic climate control
4	Sealing ring	A 14 x 18 – DIN 7603 – AL
5	Temperature transmitter	For coolant temperature indication in instrument cluster
6	Sealing ring	A 14 x 18 – DIN 7603 – AL
7	Vent screw	Only engines 116.960 and 116.961 national versions (AUS) (J) (S) (USA) 1981 to August 1981
8	Inlet connection	
9	Washer	A 8, 4, 1 each
10	Hose clamp	L 45 – 35, 2 each
11	Coolant hose	42 x 51 x 58
12	Combination screw	M 6 x 22, 10 Nm
13	Cover	
14	Gasket	Renew
15	Coolant thermostat	Start of control 84 + 2 °C, end of control (fully opened) max. 99 °C, without vent valve Observe installation instructions
16	Gasket	Check, renew if required
19	Coolant pump	
37	Closing plug	M 14 x 1.5 aluminum alloy, vehicles with air conditioner or automatic climate control
38	Sealing ring	A 14 x 8 – DIN 7603 – AL

Fan, viscofan clutch, coolant pump

Engines 116.960 and 116.961 national versions (AUS) (J) (S) (USA) 1981
116.962, 116.963, 117.962, 117.963

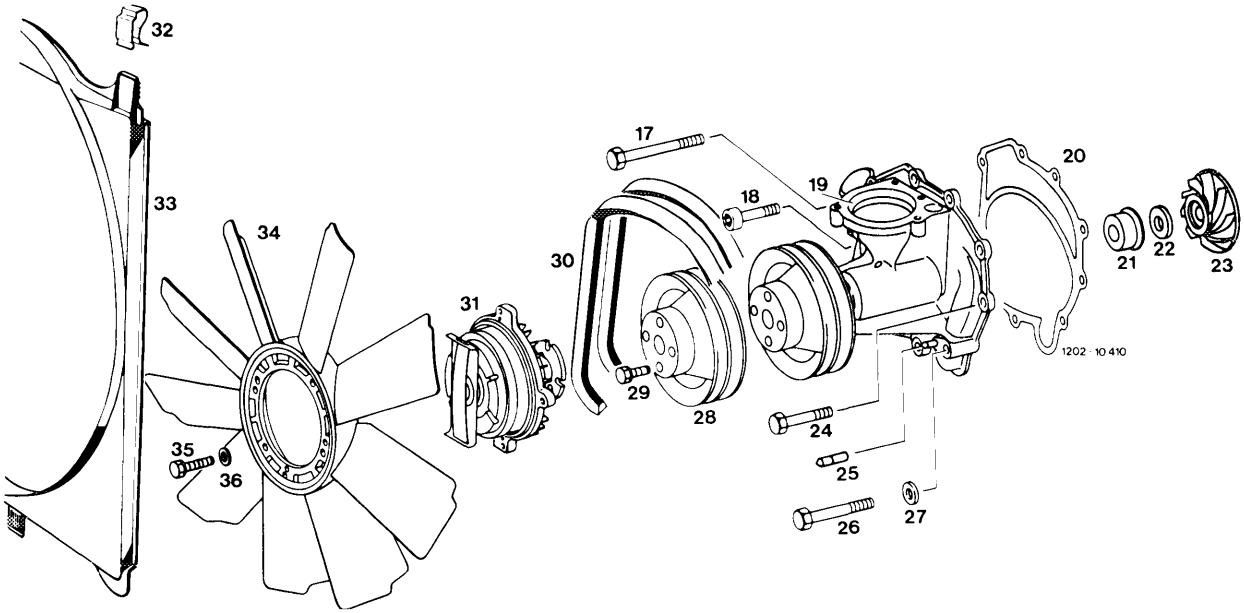

17	Hex. head bolt	M 8 x 135, 25 Nm
18	Hex. head bolt	M 8 x 65, 2 each, 25 Nm
19	Coolant pump	
20	Gasket	Renew
21	Slide ring seal	Observe installation instructions
22	Counter-ring with sealing ring	Observe installation instructions
23	Impeller	Carefully clean seat for counter-ring
24	Hex. head bolt	M 8 x 60, 4 each, 25 Nm
25	Adjusting pointer	
26	Hex. head bolt	M 8 x 85, 25 Nm
27	Washer	A 8, 4, 8 each
28	V-belt pulley	
29	Collar screw	M 8 x 18, 4 each, 25 Nm
30	V-belt	2 each (dimensions, adjusting values, installation instructions 13–335, 13–340)
31	Viscofan clutch	Speed and temperature-controlled
32	Flat shaped spring	2 each
33	Fan shroud	
34	Fan	9 blades, 460 mm dia., light alloy
35	Combination screw	M 6 x 20, 4 each, 11 Nm
36	Spring washer	B 6, 4 each, standard up to March 1981 together with hex. head bolt M 6 x 22 on engines 116.960 and 116.961 national versions (AUS) (J) (S) (USA) 1981

Coolant pump, coolant thermostat, inlet connection

Engines 116.964 and 116.965 standard version, 117.964, 117.965, 117.967 and 117.968

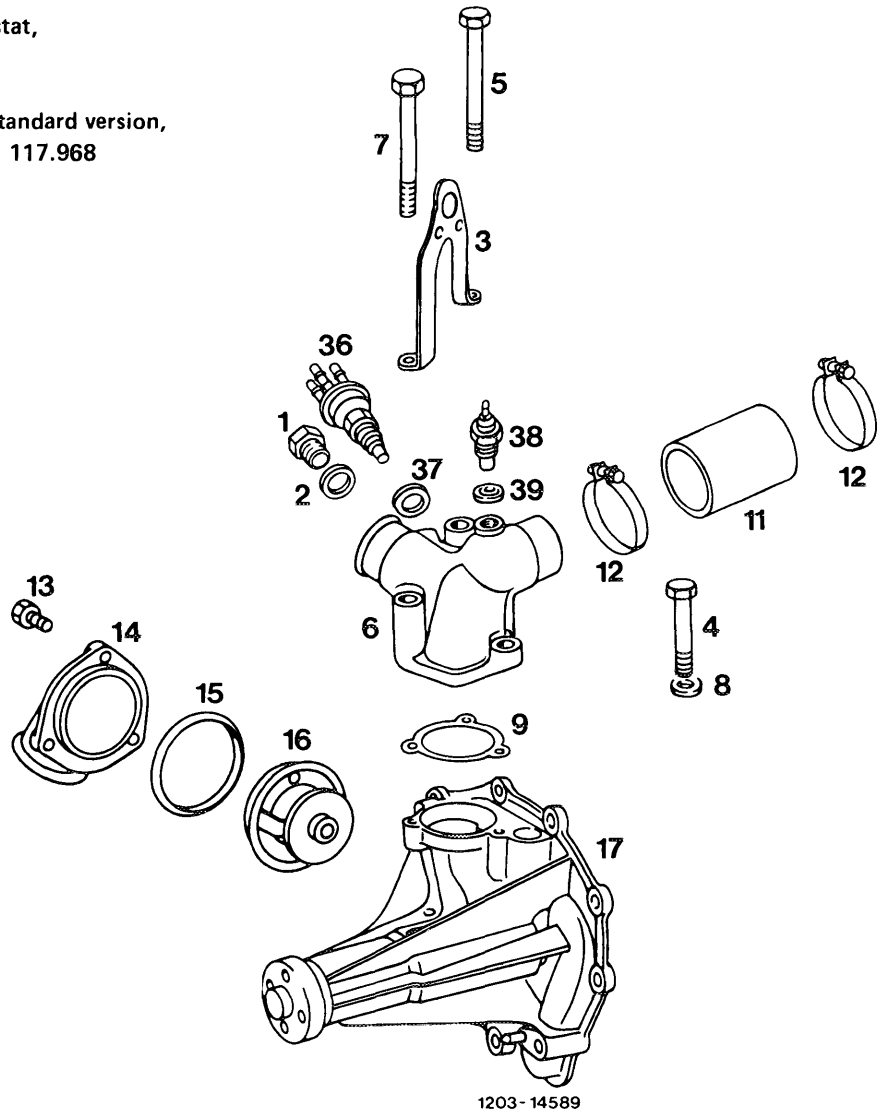

1	Closing plug	M 14 x 1.5, vehicles without air conditioner or automatic climate control
2	Sealing ring	A 14 x 18 – DIN 7603 – AL
3	Suspension eye	
4	Hex. head bolt	M 8 x 30, 25 Nm
5	Hex. head bolt	M 8 x 65, 25 Nm
6	Inlet connection	
7	Hex. head bolt	M 8 x 85, 25 Nm
8	Washer	A 8, 4, 1 each
9	Gasket	Check, renew if required
11	Coolant hose	42 x 51 x 40
12	Hose clamp	L 45–35, 2 each
13	Combination screw	M 6 x 20, 3 each, 10 Nm
14	Cover coolant thermostat	
15	Sealing ring	Check, renew if required
16	Coolant thermostat	Start of control 80 $^{+2}_{-2}$ °C, end of control (fully opened) max. 94 °C. Observe correct installation position
17	Coolant pump	
36	Temperature switch	Switches on 2nd stage supplementary fan at 105 °C – off at 98 °C, switches off refrigerant compressor at 115 °C (emergency off) – on at 108 °C
37	Sealing ring	A 14 x 18 – DIN 7603 – AL
38	Temperature transmitter	For coolant temperature indication in instrument cluster
39	Sealing ring	A 14 x 18 – DIN 7603 – AL

Tightening torques			Nm
Fastening screws	Viscofan clutch and pulley to coolant pump		25
	Coolant pump to timing case cover or crankcase		
	Inlet connection to coolant pump		
Drain plug radiator		Model 107	8
		Model 126	1.5–2[1])

[1]) This torque can be generated with a washer or coin.

Special tools

Tester for cooling system	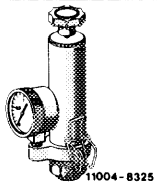	001 589 48 21 00
Radiator cap with hose for leak tester	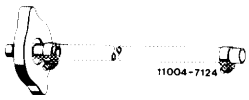	605 589 00 25 00
Socket insert 27 mm, 1/2" drive	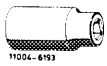	001 589 65 09 00

Conventional tool

7 mm hex. socket insert on flexible shaft for hose clamps with worm drive	e.g. Hazet, D–5630 Remscheid Order No. 426–7

Note

On the engines 116.962/963 and 117.962/963 the bypass duct below the thermostat was changed in the coolant pump housing.

This reduces fluctuations of the temperature indication between 80–100 °C. The opening (2 and arrow) in the shape of a circular section was converted into a circular opening with 30 mm dia. (1 and arrow).

This change is subsequently possible by drilling the web and the cast skin with a 3 mm drill. The aluminum chips must be extracted with a vacuum cleaner.

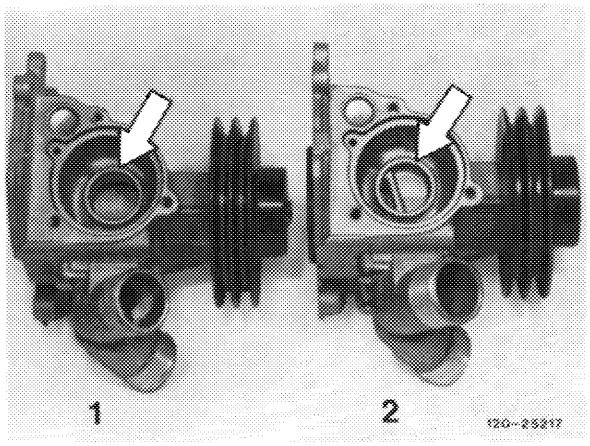

Production breakpoint circular opening: August 1982

Model	Engine	Engine end No.	Chassis end No.
107.045	116.962	009555	018918
107.046	117.962	001248	002196
126.032/033	116.963	017995	034984
126.036/037	117.963	014217	024413
126.043	116.963	017995	003653
126.044	117.963	014217	002959

A coolant thermostat from a 2nd manufacturer was optionally installed in the engines 116.962/963 and 117.962/963 as of August 1982.

Distinguishing features on coolant thermostat

Designation	1st manufacturer	2nd manufacturer
Coolant thermostat	Wahler	Behr-Thomson

Production breakpoint: optionally as of August 1982

Model	Engine	Engine end No.	Chassis end No.
107.045	116.962	009362	018804
107.046	117.962	001216	002168
126.032/033	116.963	017592	034707
126.036/037	117.963	013754	024024
126.043	116.963	017592	003562
126.044	117.963	013754	002893

Removal

1 Drain coolant (20–010).

2 Slacken V-belt for coolant and power steering pump and remove (13–340).

3 Remove coolant hoses between coolant pump and upper and lower coolant tanks.

4 On model 107, unscrew fan shroud from radiator top, lift out of the bottom retaining straps and place over the fan.

On model 126, pull off flat shaped springs (arrows), in upward direction, lift fan shroud out of retaining straps at the bottom and place over the fan.

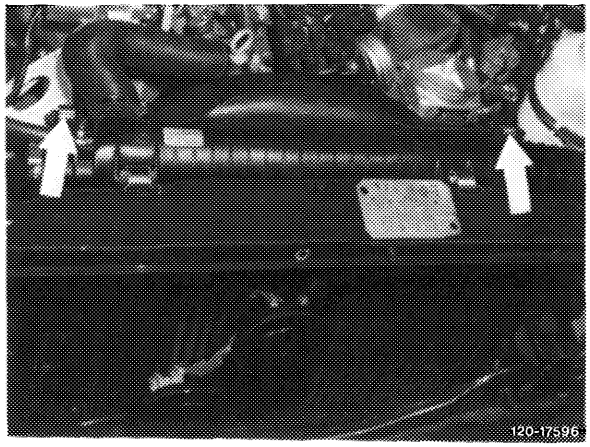

5 Unscrew fastening screws (arrow) for viscofan clutch and remove viscofan clutch with fan together with fan shroud.

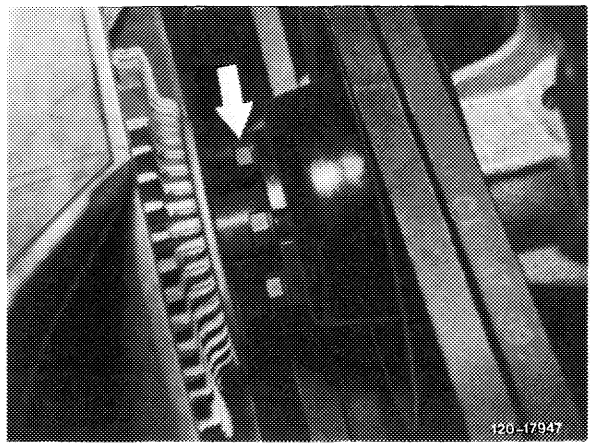

6 Remove distributor (15–530).

7 On engines 116.960, 116.961, 117.960 and 117.961 unscrew threaded pin (arrow).

8 Remove inlet connection of coolant pump:

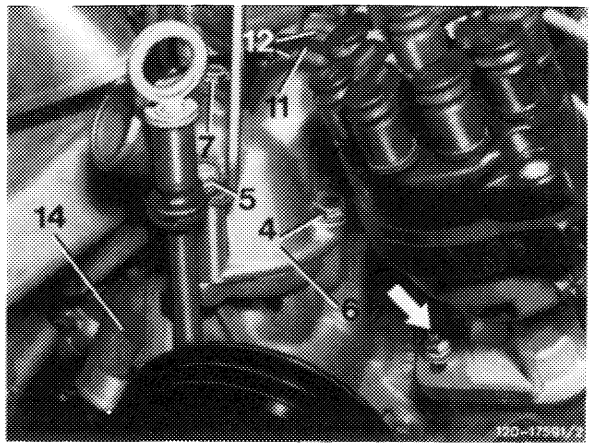

Engines 116.960, 116.961 standard version, 116.964, 116.965, 117.960, 117.961, 117.964, 117.965, 117.967 and 117.968

If screwed into inlet connection, pull single plug of electric line from temperature transmitter for coolant temperature indicator and from temperature switch for supplementary fan. Loosen front hose clamp (12) on coolant hose (11), unscrew fastening screws (4, 5 and 7) and remove inlet connection (6) with sealing ring and spacer ring.

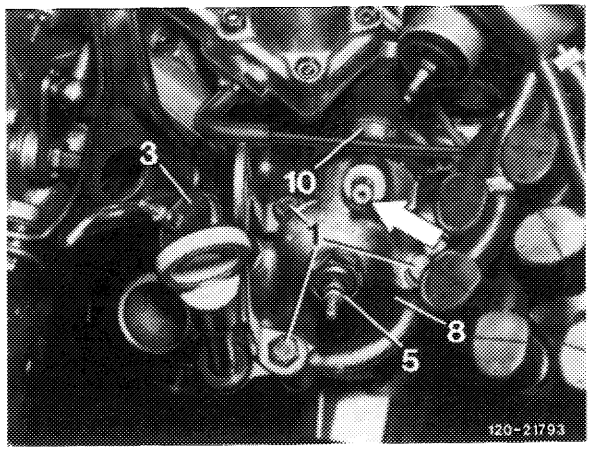

Engines 116.960 and 116.961 national versions (AUS) (J) (S) (USA) 1981
116.962, 116.963, 117.962 and 117.963

Plug single plug of electric line from temperature transmitter (5) and, if screwed in, from temperature switch (3). If installed, disconnect vent hose on connecting pipe (arrow). Loosen hose clamp (10), unscrew fastening screws (1) and remove inlet connection (8) with sealing ring and coolant thermostat.

9 On vehicles with hydropneumatic suspension, unscrew hollow screw (5) on hydraulic oil pump and put high pressure line (6) aside.

10 Remove vibration damper (03–342).

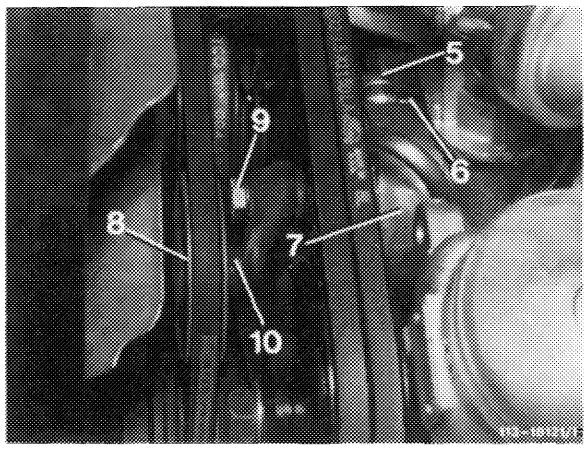

11 Unscrew fastening screws (1) and remove coolant pump.

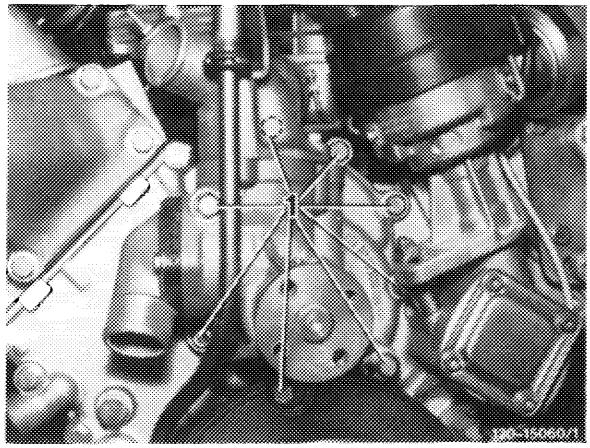

Installation

12 Carefully clean sealing surfaces and install coolant pump with new gasket. Tighten fastening screws to 25 Nm.

13 For further installation proceed vice versa to items 2—10.

Check seal or sealing ring for inlet connection and renew if required.

Tighten fastening screws of inlet connection and of viscofan clutch to 25 Nm.

14 Check firing point and adjust if required (15—501).

15 Fill in coolant (20—010).

16 Check cooling system for leaks by means of pressure test with tester (1.0 to 1.3 bar gauge pressure).